TOSHIBA

PRODUCT SPECIFICATION

COMPACT CASSETTE: RAS - M13U2MUVG-E

- Optional Occupancy sensor.
- Optional wired remote controller.
- Optional Wireless remote controller kit.
- Elegant and unobtrusive with modern design.
- Suited for 600x600 grid ceilings thanks to compact and thin chassis.

Hi - Res Image

Retail Price (interactive icons):

UK ROI

CODE			37
Performance			
Indoor Unit		**RAS-**	**M13U2MUVG-E**
Capacity Code			**13**
Nominal	Cooling Capacity	kW	3.7
	Heating Capacity	kW	5.0
UK	Cooling Total/Sensible	kW	3.42/2.74
	Heating	kW	2.61
Cooling EN14825	Range Min. - Max.	kW	1.71 - 3.70
	Power Input	kW	0.023
Heating EN14825	Range Min. - Max.	kW	2.07 - 5.00
	Power Input	kW	0.023

Indoor Data			
Air Flow	High - Low	l/s	172 - 119
	High - Low	m3/h	620 - 430
Sound	Pressure High - Low	dB(A)	38 - 30
	Power High - Low	dB(A)	53 - 45
Unit	Height x Width x Depth	mm	256 x 575 x 575
	Weight	kg	15
Panel RBC-UM21PG(W)-E	Height x Width x Depth	mm	12 x 620 x 620
	Weight	kg	3
Pipe Connection	Flare Connections (gas - liquid)	inch	3/8 - 1/4
	Drain Pipe Connection OD/ID	mm	32/25

Accessories	
RBC-AX32UM(W)-E	Wireless remote controller Kit
RB-RWS21-E	Wired Remote Controller
TCB-SIR41UM-E	Occupancy sensor

*All Accessories / Controls

Related Items:
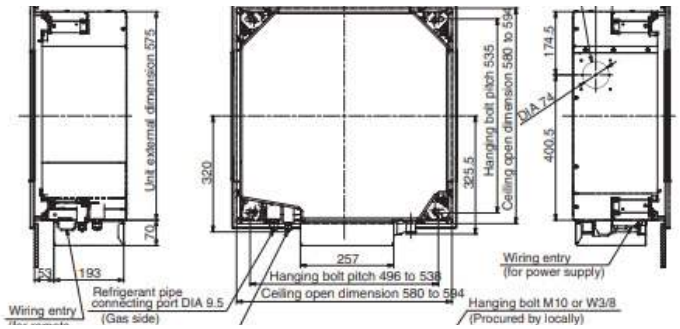
- BIM Files
- CAD Files
- Full Specification
- Dimensional Drawing
- Wiring Diagram
- Airflow/ Fan Curve
- Noise Curve Data
- Installation Manual
- Owners Manual